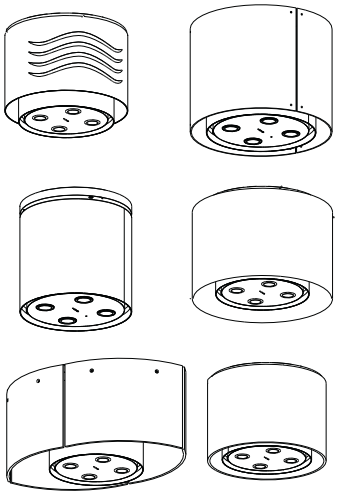

Instruction Manual

INDEX

EN

RECOMMENDATIONS AND SUGGESTIONS 3
CHARACTERISTICS 6
INSTALLATION 20
USE 31
MAINTENANCE 33

RECOMMENDATIONS AND SUGGESTIONS

⚠ The Instructions for Use apply to several versions of this appliance. Accordingly, you may find descriptions of individual features that do not apply to your specific appliance.

INSTALLATION

- The manufacturer will not be held liable for any damages resulting from incorrect or improper installation.
- The minimum safety distance between the cooker top and the extractor hood is 650 mm (some models can be installed at a lower height, please refer to the paragraphs on working dimensions and installation).

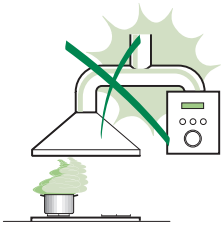

- Check that the mains voltage corresponds to that indicated on the rating plate fixed to the inside of the hood.
- For Class I appliances, check that the domestic power supply guarantees adequate earthing.
  Connect the extractor to the exhaust flue through a pipe of minimum diameter 120 mm. The route of the flue must be as short as possible.
- Do not connect the extractor hood to exhaust ducts carrying combustion fumes (boilers, fireplaces, etc.).
- If the extractor is used in conjunction with non-electrical appliances (e.g. gas burning appliances), a sufficient degree of aeration must be guaranteed in the room in order to prevent the backflow of exhaust gas. The kitchen must have an opening communicating directly with the open air in order to guarantee the entry of clean air.
  When the cooker hood is used in conjunction with appliances supplied with energy other than electric, the negative pressure in the room must not exceed 0,04 mbar to prevent fumes being drawn back into the room by the cooker hood.

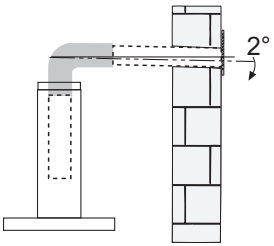

- In the event of damage to the power cable, it must be replaced by the manufacturer or by the technical service department, in order to prevent any risks.

- If the instructions for installation for the gas hob specify a greater distance specified above, this has to be taken into account. Regulations concerning the discharge of air have to be fulfilled.
- Use only screws and small parts in support of the hood.
  Warning: Failure to install the screws or fixing device in accordance with these instructions may result in electrical hazards.
- Connect the hood to the mains through a two-pole switch having a contact gap of at least 3 mm.

USE

- The extractor hood has been designed exclusively for domestic use to eliminate kitchen smells.
- Never use the hood for purposes other than for which it has been designed.
- Never leave high naked flames under the hood when it is in operation.
- Adjust the flame intensity to direct it onto the bottom of the pan only, making sure that it does not engulf the sides.
- Deep fat fryers must be continuously monitored during use: overheated oil can burst into flames.
- Do not flambè under the range hood; risk of fire.
- This appliance can be used by children aged from 8 years and above and persons with reduced physical, sensory or mental capabilities or lack of experience and knowledge if they have been given supervision or instruction concerning use of the appliance in a safe way and understand the hazards involved. Children shall not play with the appliance. Cleaning and user maintenance shall not be made by children without supervision.

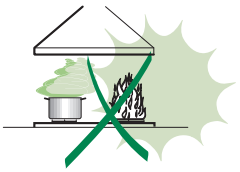

- "**CAUTION**: Accessible parts may become hot when used with cooking appliances."

MAINTENANCE

- Switch off or unplug the appliance from the mains supply before carrying out any maintenance work.
- Clean and/or replace the Filters after the specified time period (Fire hazard).
- The Grease filters must be cleaned every 2 months of operation, or more frequently for particularly heavy usage, and can be washed in a dishwasher.
- The Activated charcoal filter is not washable and cannot be regenerated, and must be replaced approximately every 4 months of operation, or more frequently for particularly heavy usage.
- Clean the hood using a damp cloth and a neutral liquid detergent.

The symbol on the product or on its packaging indicates that this product may not be treated as household waste. Instead it shall be handed over to the applicable collection point for the recycling of electrical and electronic equipment. By ensuring this product is disposed of correctly, you will help prevent potential negative consequences for the environment and human health, which could otherwise be caused by inappropriate waste handling of this product. For more detailed information about recycling of this product, please contact your local city office, your household waste disposal service or the shop where you purchased the product.

CHARACTERISTICS

Components (Zoom model)

Ref.	Q.ty	Product Components
1	1	Hood Canopy complete with: Controls, Light, Filters, Motor.
2	1	Hood support plate.
4	1	Cable raceway
14	1	Pawl
Ref.	**Q.ty**	**Installation Components**
11	4	Wall plugs ø 10
12h	4	Screws M5 x 70
12g	1	Screws for pawl
	Q.ty	**Documentation**
	1	Instruction Manual

ZOOM (15 Kg)

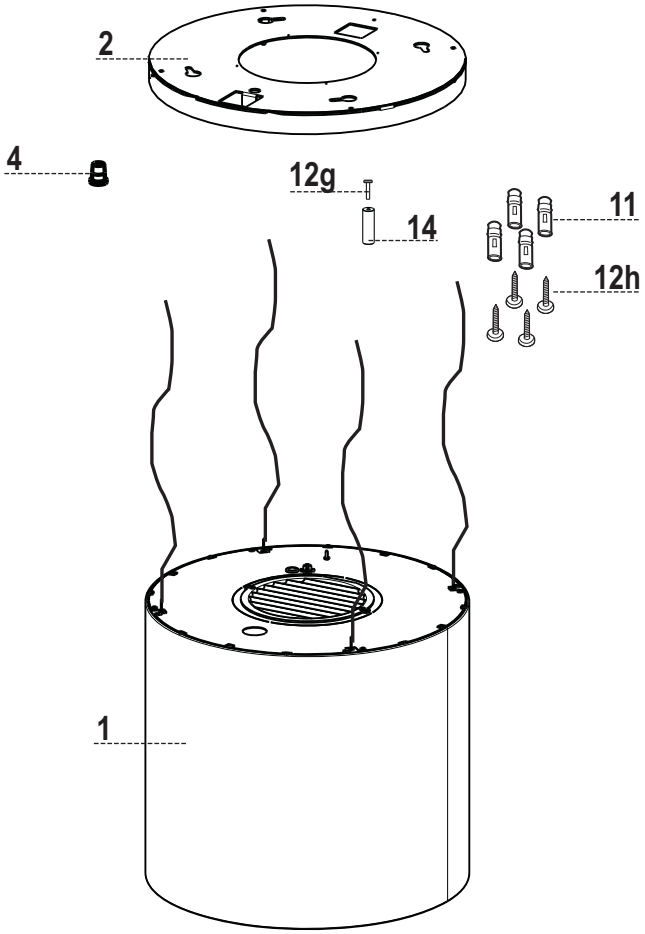

Components (Chic-Vanilla models)

Ref.	Q.ty	Product Components
1	1	Hood Canopy complete with: Controls, Light, Filters, Motor.
2	1	Hood support Plate (with lamp holder).
4	1	Cable raceway
5	3	Glass
6	3	Glass fixing plates
14	1	Pawl
Ref.	**Q.ty**	**Installation Components**
11	4	Wall plugs ø 10
12h	4	Screws M5 x 70
12d	6	Screws M4 x 20
12e	6	Screws M4 x 10
12g	1	Screws for pawl
22	12	Rubber washers
	Q.ty	**Documentation**
	1	Instruction Manual

CHIC / VANILLA (30 Kg)

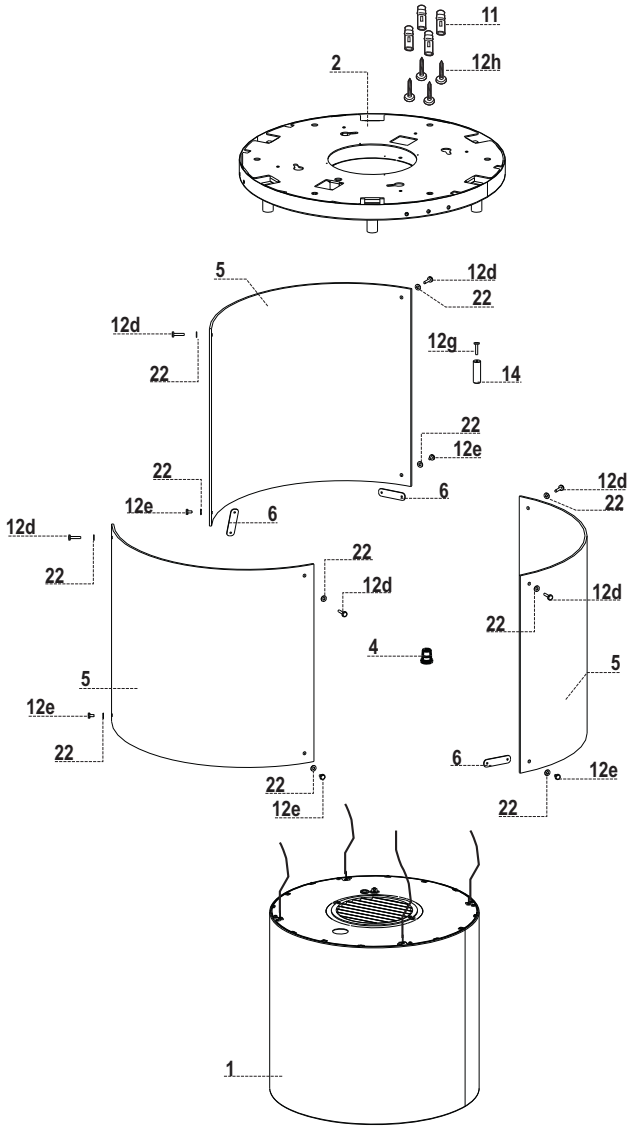

Components (Nest models)

Ref.	Q.ty	Product Components
1	1	Hood Canopy complete with: Controls, Light, Filters, Motor.
2	1	Hood support Plate (with lamp holder)
2.1	2	Hood support plate extension
4	1	Cable raceway
5	4	Glass (Glass products manually)
14	1	Pawl
Ref.	**Q.ty**	**Installation Components**
7.1	8	Glass fixing brackets with bush
11	10	Wall plugs ø 10
12h	10	Screws M5 x 70
12d	24	M4 Nut (fixing Brackets to Plate extension)
12e	8	Glass fixing knobs
12f	8	Glass protection gaskets
12g	1	Screw for pawl
12h	8	Glass protection gaskets
	Q.ty	**Documentation**
	1	Instruction Manual

NEST (39 Kg)

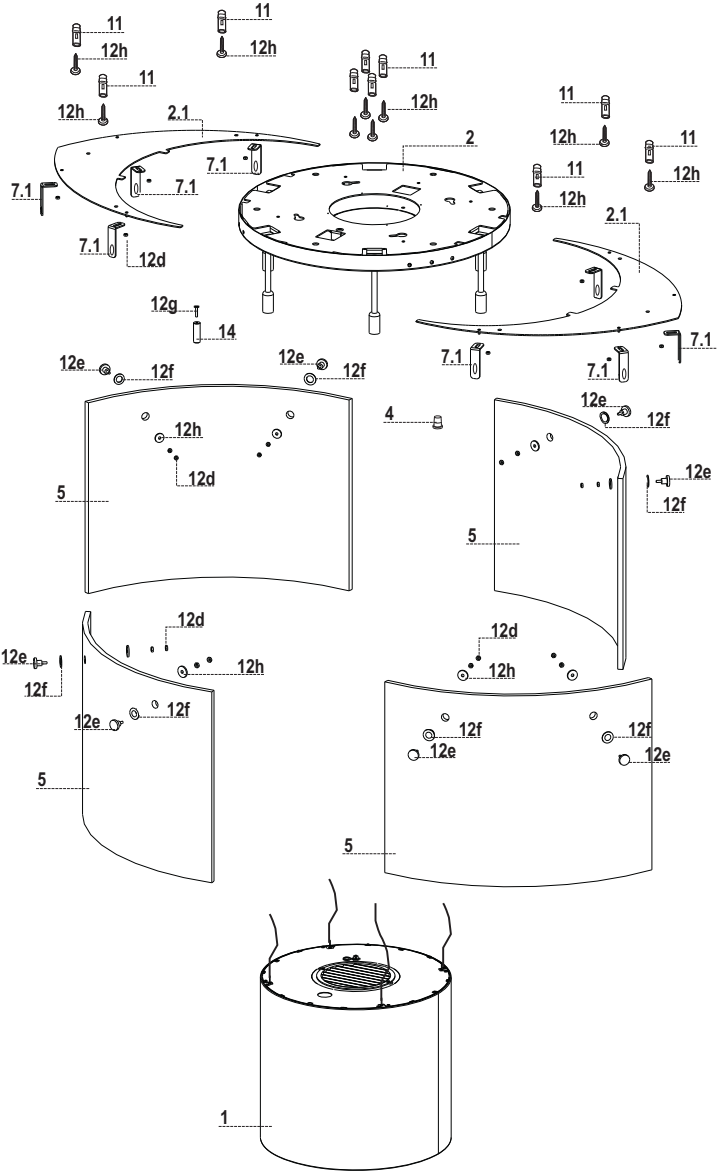

Components (Vertigo model)

Ref.	Q.ty	Product Components
1	1	Hood Canopy complete with: Controls, Light, Filters, Motor.
2	1	Hood support Plate (with lamp holder)
4	1	Cable raceway
5	1	Glass or Panels the other material
14	1	Pawl
Ref.	**Q.ty**	**Installation Components**
11	4	Wall plugs ø 10
12h	4	Screws M5 x 70
12d	4	Chrome plated glass fixing Pin/Screw
12g	1	Screw for pawl
	Q.ty	**Documentation**
	1	Instruction Manual

VERTIGO (20 Kg)

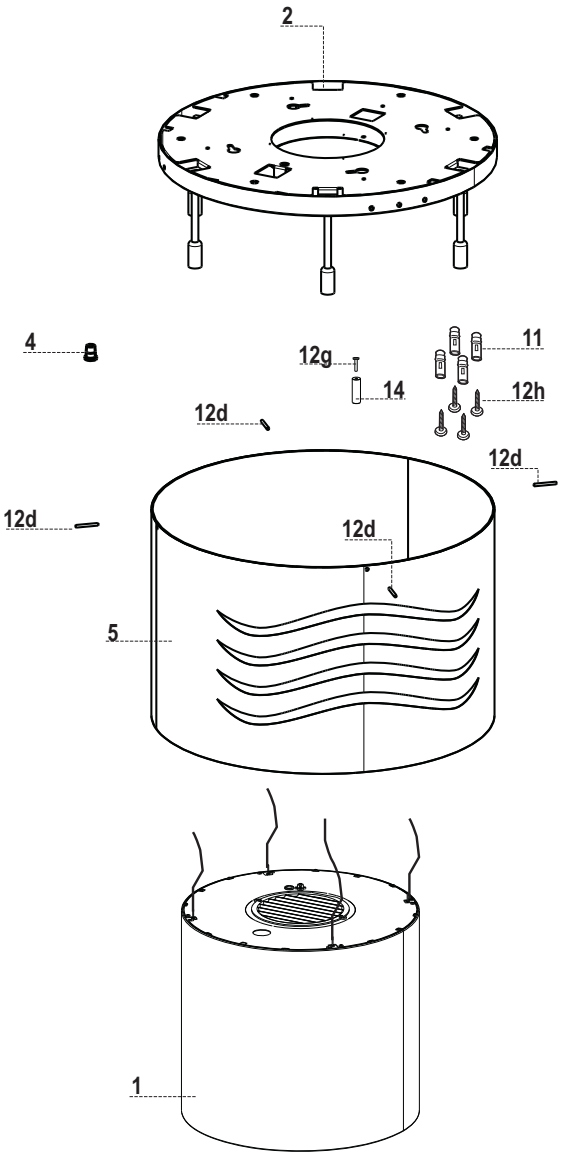

Components (Kaleidos model)

Ref.	Q.ty	Product Components
1	1	Hood Canopy complete with: Controls, Light, Filters, Motor.
2	1	Hood support Plate (with lamp holder)
4	1	Cable raceway
5	1	Glass or Panels the other material
14	1	Pawl
Ref.	**Q.ty**	**Installation Components**
11	4	Wall plugs ø 10
12h	4	Screws M5 x 70
12d	4	Chrome plated glass fixing Pin/Screw
12g	1	Screws for pawl
	Q.ty	**Documentation**
	1	Instruction Manual

KALEIDOS (18 Kg)

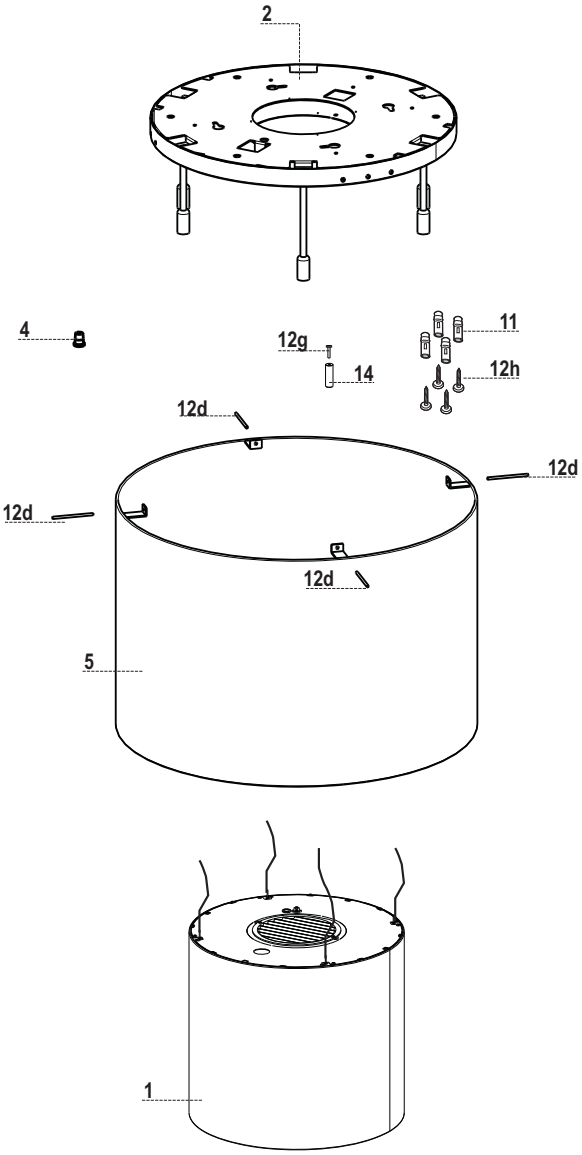

Components (Luxia model)

Ref.	Q.ty	Product Components
1	1	Hood Canopy complete with: Controls, Light, Filters, Motor.
2	1	Hood support Plate (with lamp holder)
3	1	Power supply cable lock
5	1	Glass
14	1	Pawl
Ref.	**Q.ty**	**Installation Components**
11	4	Wall plugs ø 10
12h	4	Screws M5 x 70
12d	4	Chrome plated glass fixing Pin/Screw
12g	1	Screw for pawl
	Q.ty	**Documentation**
	1	Instruction Manual

LUXIA (30 Kg)

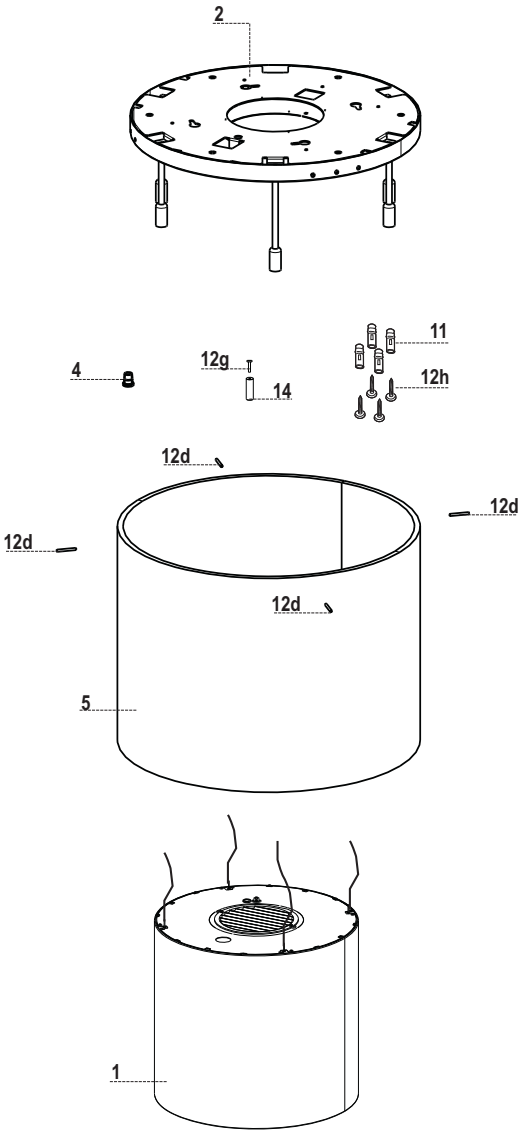

Dimensions

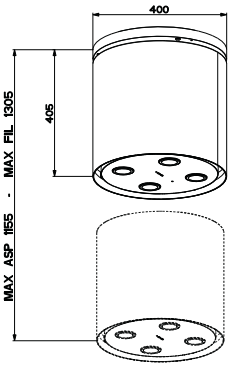

ZOOM

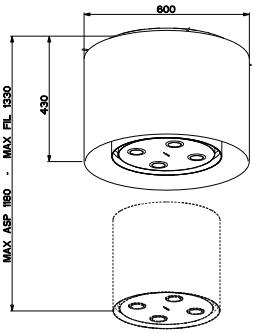

KALEIDOS

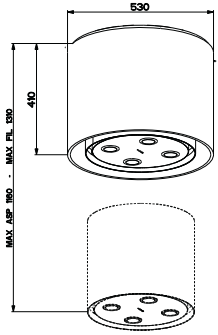

LUXIA

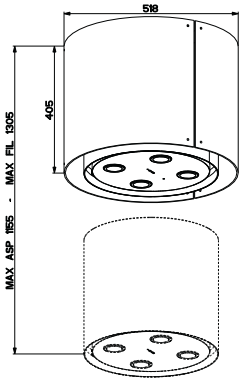

CHIC / VANILLA

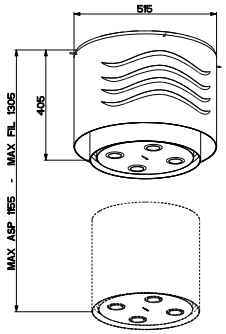

VERTIGO

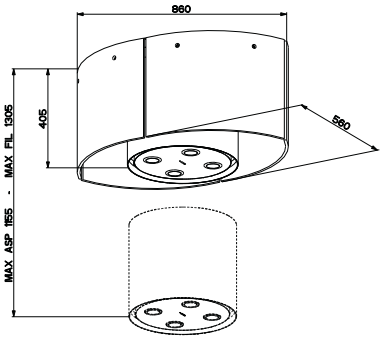

NEST

INSTALLATION

This hood is designed to be mounted on the ceiling/on a shelf, above a free-standing Hob (min. 650 mm), in:

- **Ducting version**: Evacuation to the outside.
- **Recirculation version**: Internal recirculation.

Warning: **The F-Light hood is a system comprising hood + lamp, so that two separate electrical wiring systems must be provided, one for the hood and one for the lamp.**
The Zoom model is not fitted with a lamp.

Sequence of operations - Installation

- **Preparing for installation**
- **Drilling the Ceiling/Shelf and Fixing the support plate**
- **Connections**
- **Fitting the hood body**
- **Functional Check**
- **Disposal of Packaging**

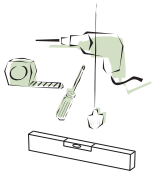

Fitting the Limiter pawl

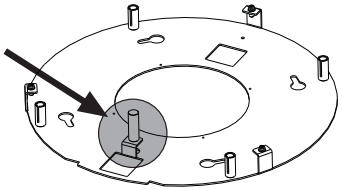

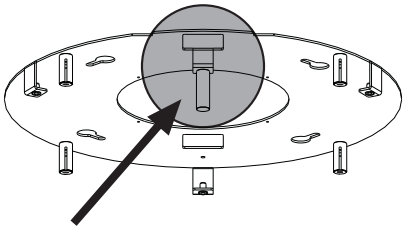

- Unfasten the 3 screw that join the parts of the Plate (of different shapes and/or sizes) using the wrench provided.
- Take the Pawl and fix it to the plate on the bracket in the position indicated in the figure, using the screw provided.
- Take the bulb holders and slot them onto the brackets provided, which can be seen by their fork-shaped ends.
  Warning: the clamps used to fix the wires must not be cut.
- Tighten the Screw fixing the bulb holders to the bracket, in such a way as to hold the latter between the 2 washers.

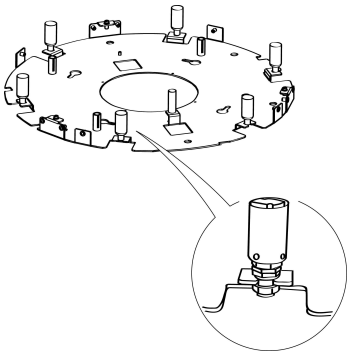

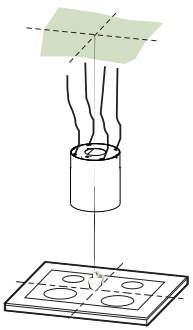

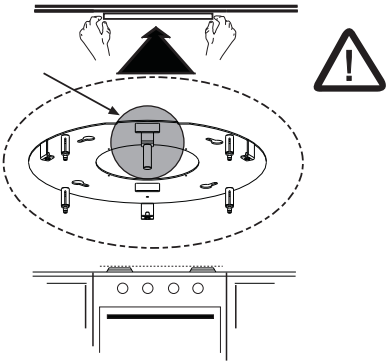

Ceiling/Shelf drilling and Plate Fixing

CEILING/SHELF DRILLING

- Use a plumb-line and mark the centre of the cooking hob on the Support Ceiling/Shelf.
- Rest the plate against the ceiling/shelf, taking care to keep the limit pawl that has just been fitted in a position facing the installer and the cooking hob (the limit pawl must not be confused with the other 4 used to fix the steel cables that move the Hood).
- Mark on the ceiling the centres of the holes in the plate.
- Drill the following points:
  - Ceilings in solid concrete: As per concrete plugs used.
  - Ceilings in hollow bricks with 20 mm resistance thickness: Drill a hole ø 10 mm (insert Plugs **11** supplied immediately).
  - Ceilings with Wood Beams: As per Wood Screws used (not supplied).
  - Wooden shelf, with a resistant thickness of 15 mm: drill a hole ø 7 mm.
  - Feeding the electric supply cable: drill a hole ø 10 mm.
    Warning: there will be two lines to be connected: a direct electric line for the hood power supply and another line with a switch for the lamp. This does not apply to Zoom model.
  - Air Outlet (Ducting Version): according to the diameter of the connection to the external ducting pipe.
- Insert two screws, crossing them and leaving 4-5 mm from the ceiling:
  - for solid concrete, concrete plugs, not provided.
  - for hollow bricks with approx. 20 mm resistance thickness, screws **12h**, provided.
  - for wooden beams, wood screws, not provided.
  - for wooden shelves, screws with washers and nuts, not provided.

FIXING THE PLATE

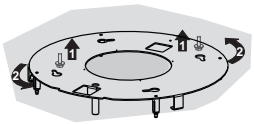

- Lift up the fixing plate, taking care to ensure that the limit pawl is positioned frontally.
- Fit the slots onto the two screws previously inserted in the ceiling, and turn until they are at the centre of the adjustment slot.
- Tighten the two screws completely and screw in the other two provided; before locking the screws completely it is possible to make adjustments by turning the piece, making sure that the screws do not come out of the adjustment slot.
- The unit must be securely fastened both due to the weight of the Hood and the stress caused by occasional sideways pressure on the Appliance when in position. Once the unit has been fixed, make sure that the plate is stable.
- In all cases where the Ceiling is not sufficiently strong at the point of suspension, the Installation technician must strengthen it with suitable plates and counterplates, anchored to structurally sound elements.

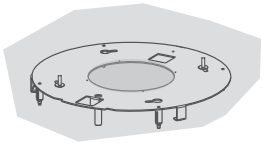

FIXING THE PLATE EXTENSION (NEST MODEL)

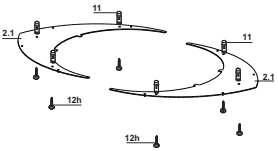

- Take the 2 Extensions **2.1** and hook them in the slots provided in Plate **2** which has already been fitted.
- Mark on the ceiling the centres of the holes in the plates.
- Remove the extensions.
- Drill a hole ø 10 mm (insert Plugs **11** supplied immediately).
- Hook up the extensions again and fix them using the screws **12h** provided.

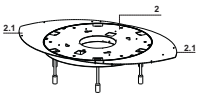

CONNECTING HOOD-PLATE CABLES

N.B. Before continuing with installation it is necessary to move the hood to a height of at least 650 mm from the cooker hob, using a support or the assistance of another person.

⚠ This is essential, as the hood cables must **necessarily** be connected to the plate fitted to the ceiling without the weight of the hood bearing on the structure.

- The cable fixing system is made up of 3 parts:
  - Threaded Pawls (**a**) already mounted on the ceiling plate.
  - Cable clamp screws (**b**) provided.
  - Safety knobs (**c**) provided.

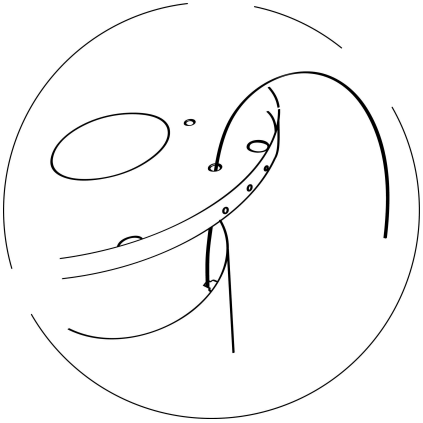

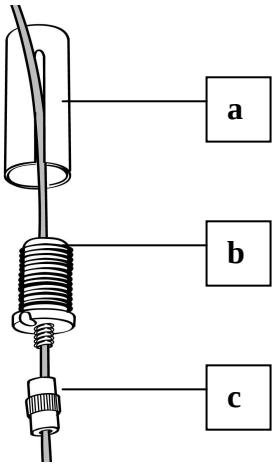

- Pass the cables connected to the hood canopy into the respective holes in the plate cover, after dismantling

- Insert the cable raceway **4** in the opening on the plate cover and pass the hood power supply cable through it.

Warning: Do not break or remove the clamp fixing the power cable to the Hood

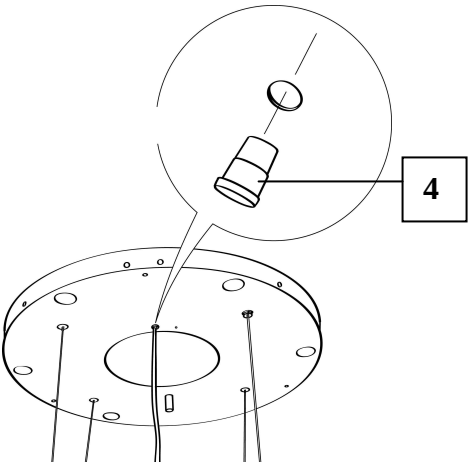

• Attention to the direction of the plate fixed to the ceiling (the limit pawl on the plate fastened to the ceiling has a corresponding hole on the plate cover and on the hood canopy).

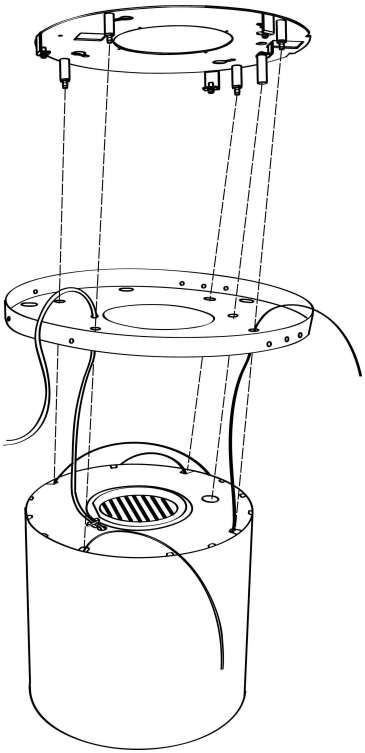

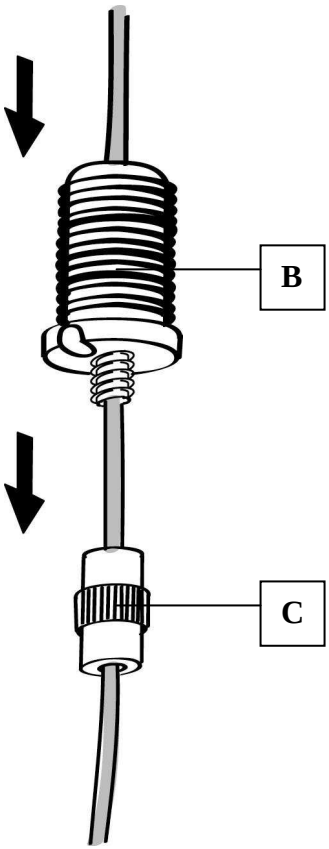

• Insert the cables into the safety knobs (**c**) with the thread at the top.
• Insert the cables into the cable clamp screws (**b**)

- Pass the cables through the slots in the threaded pawls (**a**) and screw the cable locking screws (**b**) to the pawls themselves.

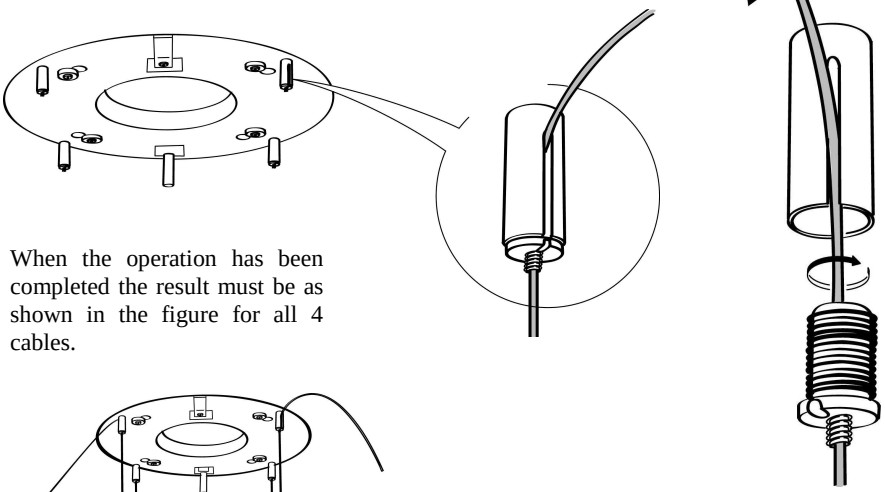

- When the operation has been completed the result must be as shown in the figure for all 4 cables.

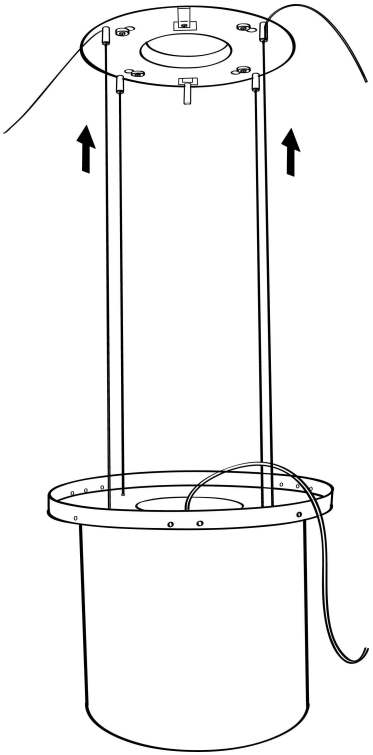

- At this point we have all 4 cables connected to the plate

Bring the cables under tension by pushing them upwards so that they slide inside the cable clamp screw and slide out of the slot in the threaded pawl.

This is possible because the cable clamp screw has a system that, if mounted properly, allows the cables to slide inside it in one direction only, and prevents it from sliding in the other direction.

Attention, the cables all have the same length to facilitate the operation of the final level. The front left cable must not be slacker than the others.

LEVELLING THE HOOD

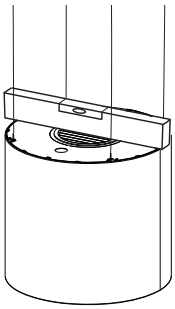

- The hood mobile unit must be levelled to allow the movement to operate properly.
- The hood is levelled by adjusting the safety pawls.

- Rest a spirit level on the hood.

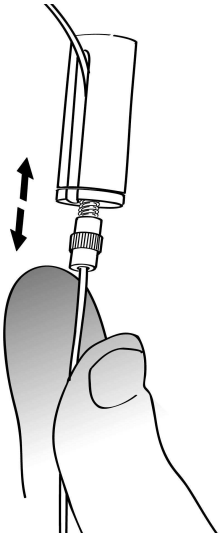

- When the safety knobs are pressed upwards, movement of the hood is “unlocked”. By inserting or extracting the cable from the cable clamp screw it is possible to make adjustments that allow the mobile hood body to be levelled.
- Once the hood has been set level, the safety knobs must be tightened again.

Warning:

- **Please check that all 4 cables are stretched.**
- **Please check that all 4 cables were not damaged during installation.**
- **It must be remembered that the minimum distance between the hood and the cooking hob must be 650mm.**
- **The mobile unit (hood canopy) must have a maximum stroke of 900 mm in case of recirculation version and in the case of the ducting kit of 750mm.**

Connections

AIR OUTLET - DUCTING VERSION

To install the hood in the ducting version, please refer to the instructions provided in the ducting kit specific to the hood.

AIR OUTLET – RECIRCULATION VERSION

- Open the lighting unit by pulling on the notch provided.
- Remove the grease filter.
- Make sure that the Activated charcoal odour filter has been fitted.

FIXING THE POWER SUPPLY CABLE

- Tighten the power supply cable and fix it to the Bracket on the ceiling mounted Plate, using the tongue already mounted and 2 screws.
- Slot the rubber cable raceway already threaded onto the power cable into the slot to prevent future damage.
- Connect the Hood to the Mains Power Supply, inserting a bipolar switch with a contact aperture of at least 3 mm.

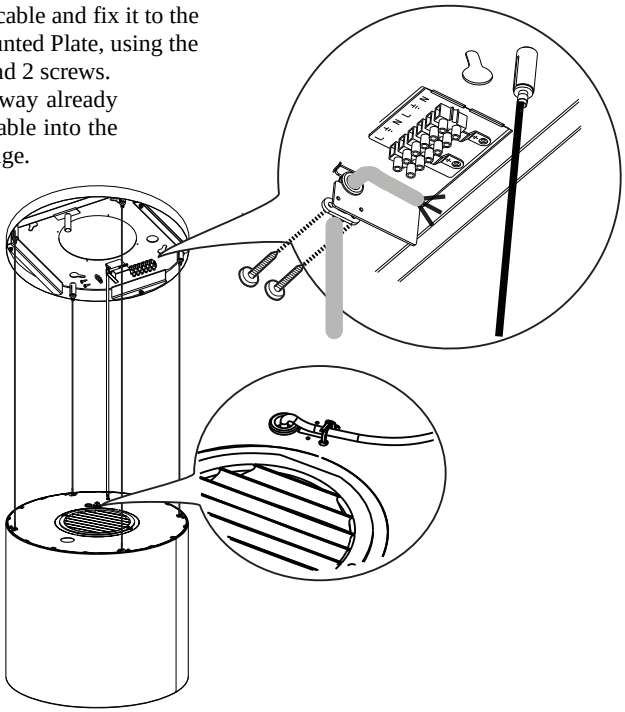

- Remove the Grease filters (see paragraph “Maintenance”) and make sure that the Power cable has been properly inserted into the Suction fan socket.
- At this point it is possible to remove the clamp fastening the power cable to the Hood Canopy.

- At this point it is possible to connect up the hood, and the lamp if there is one, to the power supply using the respective power cables.

FITTING THE PLATE COVER

- Close the plate cover using the 3 screws removed previously and the wrench provided

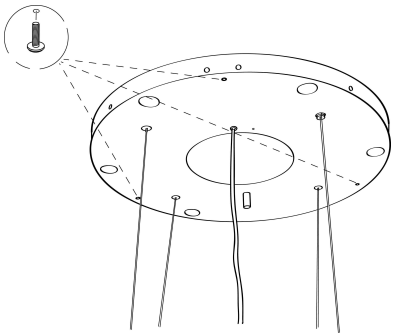

FITTING THE GLASS – CHIC-VANILLA MODELS

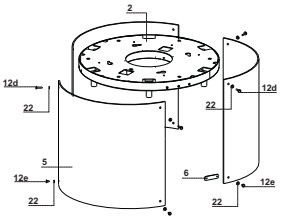

- Take the lamps and insert them in the lamp holders.
- They do not have to be screwed in, but simply inserted all the way.

- Fix the glass **5** to the plate using the screws **12d** and washers **22** in the top part.
- Fix the glass elements together at the bottom using the glass fixing plates **6** with screws **12e** and washers **22**.

FITTING THE GLASS – NEST MODEL

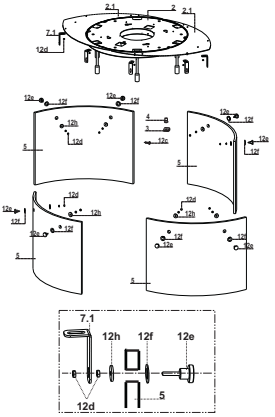

- Take the lamps and insert them in the lamp holders.
- They do not have to be screwed in, but simply inserted all the way.
- Fix the assembly frames **7.1** to the plate using the nuts **12d**.
- Insert the Seal **12f** into the Knob **12e**, then insert the glass **5** and the other Seal **12h**, fixing the whole with a Nut **12d**.
- Insert the end of the Knob **12e** into the slot in the assembly frames **7.1** and fasten with the second Nut **12d**.

- Small adjustments can be made to the glass by loosening the nuts **12d** that clamp it to the bracket.

FITTING THE GLASS – VERTIGO-KALEIDOS-LUXIA MODELS

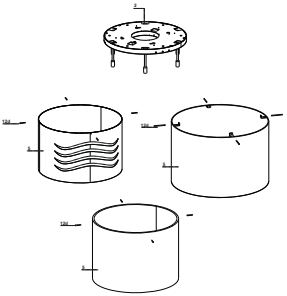

- Take the lamps and insert them in the lamp holders.
- They do not have to be screwed in, but simply inserted all the way.

- Fix the glass (or other material) **5** to the plate using the fixing knobs **12d**.

USE

Control panel

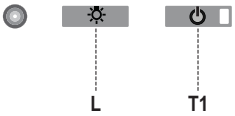

Button	Function	Display
L	Turns the lights On/Off.	-
T1	**Hood Down** Press for 2 seconds to raise the Hood. Press briefly to turn the Motor On/Off.	On/Off
	Hood Up Press once: The Hood lowers. Press a second time: The Hood Stops. When the movement has been completed the motor turns on at Speed two.	Off/Off

Warning: The Hood controls only control the Hood functions. The Lighting unit has a completely separate power supply and a separate switch.

The electronic control system recognises and signals two types of fault.

Led T1	
Slow flashing	**Current absorption threshold exceeded:** If an overload condition occurs, the fault is signalled by LED **T1** on the keyboard flashing once every 2 seconds. Check that nothing is blocking normal hood movements. The signal remains active until a new hood open/close command is given.
Rapid flashing	**Hood opening safety microswitch tripped:** If the safety microswitch trips, the fault is signalled by LED **T1** on the keyboard flashing quickly (once every 250 ms). This means that the hood has passed the microswitch…….. **Call Technical Assistance!** You can continue to use the hood's light and motor functions while this fault is active. Whenever the motor is on, LED **T1** will continue to flash, indicating that the fault is still present.

REMOTE CONTROL

The appliance can be controlled using a remote control powered by a 1.5 V carbon-zinc alkaline batteries of the standard LR03-AAA type (not included).

- Do not place the remote control near to heat sources.
- Used batteries must be disposed of in the proper manner.

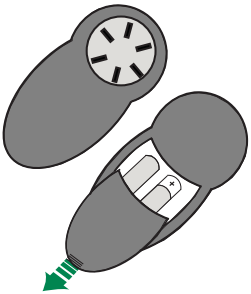

Control panel

Button	Function	Display
⏻	Turns the Motor On/Off.	-
	Hood Closed: - Press the button briefly to start lowering the hood - It will stop when the button is pressed again. When the movement has been completed the motor will start at speed 2.	-
	Hood Open: - Press and hold for 2 seconds to activate raising of the hood, which stops when it reaches the stop. - Press (briefly) to stop the movement (before the stop is reached). - Press again briefly to turn the motor on/off. - Press and hold for 2 seconds to start raising of the hood. - If the motor is on, it will first stop the motor and then start the movement.	-
−	Decreases the speed of the Motor.	-
+	Increases the speed of the Motor.	-
ⓘ	**INTENSIVE** - This can only be activated with the hood lowered and when the **delay** or **24h** functions are not active. - Activates Intensive speed from any other speed. To disable it, simply press the same button again or turn the motor off. - Intensive speed is timed to run for 10 minutes. At the end of the 10 minutes the system will automatically return to the speed that was set before.	The led on the motor button (on the hood controls) will flash once a second.
🕒	**Press briefly for the Delay Function**: Can only be activated if the **Intensive** or **24h** function is not active. Activates and deactivates total shutdown of the hood (motor+lights) after 30 minutes: To disable the Delay, simply press the button again or turn the motor off.	The led on the motor button (on the hood controls) will flash once every 0.5 seconds.
	Press and hold for 2 sec. for the 24H Function: Can only be activated if the **Intensive** or **Delay** function is not active. Activates and deactivates the 24H function for 10 minutes every hour, for 24 hours. After this time it is deactivated.	The led on the motor button (on the hood controls) will flash once every 2 seconds.
☼	Turns the Hood lights On/Off.	

MAINTENANCE

Grease filter

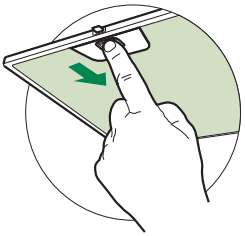

The filter must be cleaned every 2 months of operation, or more frequently for particularly heavy usage, and can be washed in a dishwasher.

CLEANING METAL SELF- SUPPORTING GREASE FILTER

- Open the lighting unit by pulling on the notch.
- Remove the filter one by one pushing it towards the back side of the hood unit and simultaneously pulling downwards.
- Any kind of bending of the filter has to be avoided when washing it. Before fitting it again into the hood make sure that it is completely dry.
- When fitting the filter into the hood pay attention that they are mounted in correct position the handle facing outwards.
- Replace the lighting unit.

Activated Charcoal Filter (Recirculation Version)

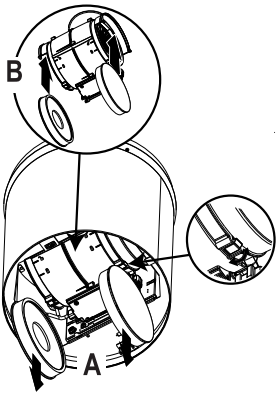

This cannot be washed or regenerated, and must be changed approximately once every 4 months, or more frequently in the case of particularly intensive use.

CHANGING

- Open the light unit.
- Remove grease filter.
- Remove the saturated Activated Charcoal Filters, as indicated (**A**).
- Fit the new Filters, as indicated (**B**).
- Fit the anti-grease filter and the Light Unit back into position.

Lighting unit

Warning: This appliance is fitted with a white LED lamp classed as 1M according to EN 60825-1: 1994 + A1:2002 + A2:2001 standards; maximum optical power emitted @439nm: 7µW. Do not look directly at the light through optical devices (binoculars, magnifying glasses…).

- For replacement contact technical support. ("To purchase contact technical support")

Lighting Unit Lamps

Chic	G9 -- Energy Saving 9W
Vanilla	G9 -- Energy Saving 9W
Luxia	G9 -- High Power 40W
Kaleidos	G9 -- Energy Saving 9W
Nest	G9 -- High Power 40W
Vertigo	G9 -- Energy Saving 9W

Attention: Bulbs are not provided.

Additional information for the installation technician

- Open the lighting unit by pulling on the notch provided.
- Apply the label, indicated the type of lighting, on the Hood as indicated in the figure (Rif.**A**).

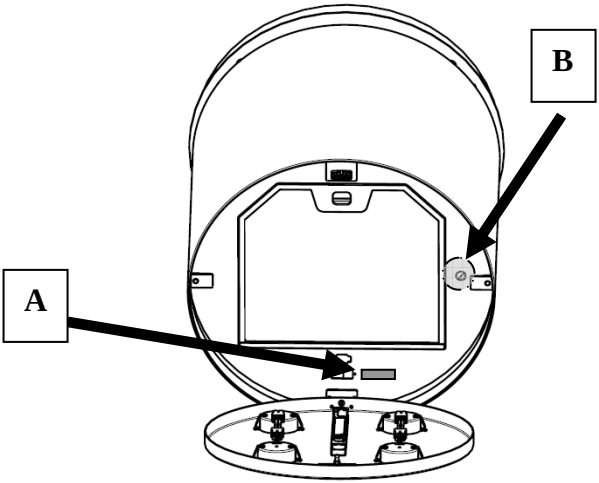

Procedure to be used in case of malfunction on the movement

- Check that the fuse is properly inserted and that it has not burned out, for replacing the fuse open the lighting unit and unscrew the fuser holder and replace it with one having the same characteristics (Rif.**B)**
- Check that the hood canopy is fitted level (the use of a spirit level is recommended).
- Check that the four cables are all at the same tension. **The front left cable must not be slacker than the others**.

If even these operations do not solve the problem contact the Technical Assistance.

CE